Product Data Sheet

ELECTRICAL EQUIPMENT

VENTI-GL100S 12W

CODE: 8005280

Area of application

Flat Glass Type Exhaust Fan with Bearing & Humidity Sensor

Product Advantages

VENTI-GL100S is a Flat Glass Type Exhaust Fan with Bearing & Humidity Sensor. Exhaust air volume :180m3. Rotational speed:2450rpm. Noise:<30db

VITO EUROPE
102 Iztochna Tangenta str. 4th Floor
P.C. 1528, Sofia/Bulgaria
Phone: +359 2 4341575
E-mail: info@vitoeurope.com

www.vitolighting.com

Product Data Sheet

ELECTRICAL EQUIPMENT

VENTI-GL100S 12W

CODE: 8005280

Product Features

Electrical

Power (Watt): 12
Voltage: 220-240V ~ 50/60Hz
Power Factor: 1
Electrical Protection: Class II
Surge Protection: --
Dimmability: --
Switch Cycle (Times): --

Lighting

Lumen (Lm): --
Luminaire efficacy (Lm/W): --
Colour Temperature: --
Beam Angle: --
CRI: Ra --
Lifetime (Hours); --
EEI : --

Material Characteristics

IP Class: IPX2
IK Class: -
Material: Glass cover/ABS housing
Ambient Temperature: -10℃<ta<+40℃
Body Color: Black cover + WHITE
Product Size (mm): 143x143x95.6

Packing Informations

Pieces/Outbox: 20
Outbox Size (mm): 555x340x345
Outbox G.W. (Kg): 13
Outbox Volume (m^3): 0,0651015
Unit Weight (Gr): 650
Barcode : 6977231354872

Technical Drawing

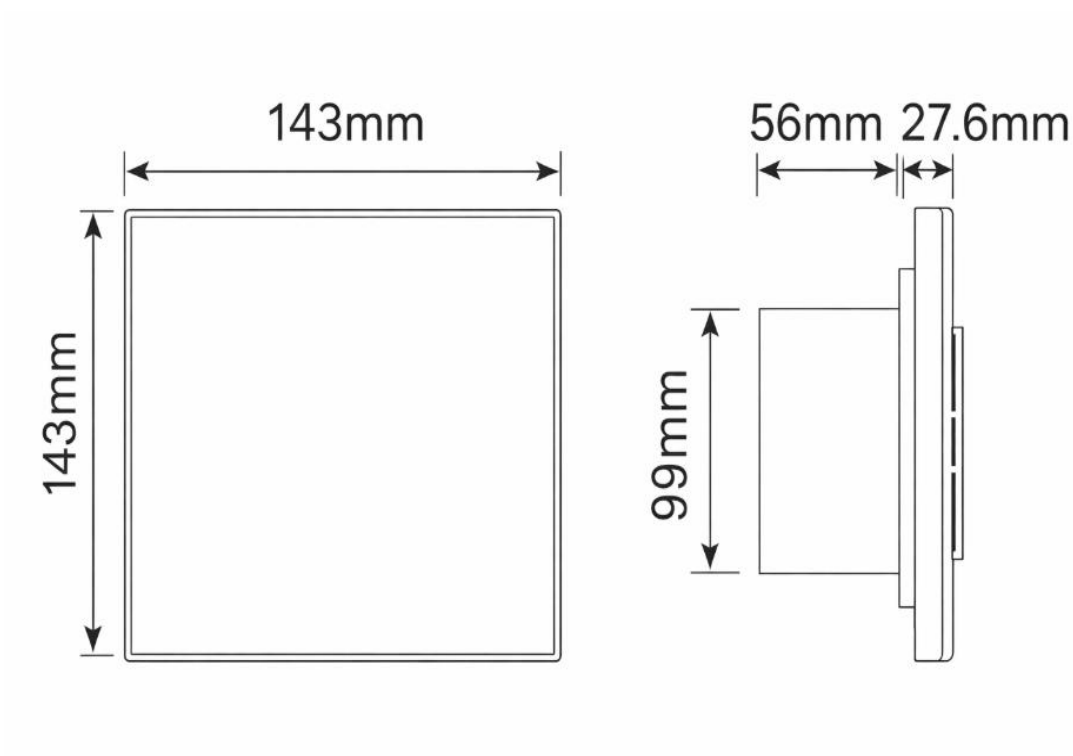

Light Distribution Curve

System Definition: VT/VENTI-GL100S/FLAT GLASS/Ø100MM/HUMIDITY SENSOR/12W/BLACK/BEARING AIR VENTILATION

VITO EUROPE
102 Iztochna Tangenta str. 4th Floor
P.C. 1528, Sofia/Bulgaria
Phone: +359 2 4341575
E-mail: info@vitoeurope.com
www.vitolighting.com